Fit-for-Parks
Aerobic Cycle, Body Pulls & Push Ups, Pull Downs & Pull Ups & Leg Raises

EQUIPMENT INVENTORY			
ITEM	**DESCRIPTION**	**QTY**	**FHF (mm)**
1	FFP Aerobic Cycle - I/G	1	850
2	FFP Body Pulls & Push Ups - I/G	1	150
3	FFP Pull Downs - I/G	1	590
4	FFP Pull Ups & Leg Raises - Common	1	975
5	FFP Central Column Quad - I/G	1	N/A

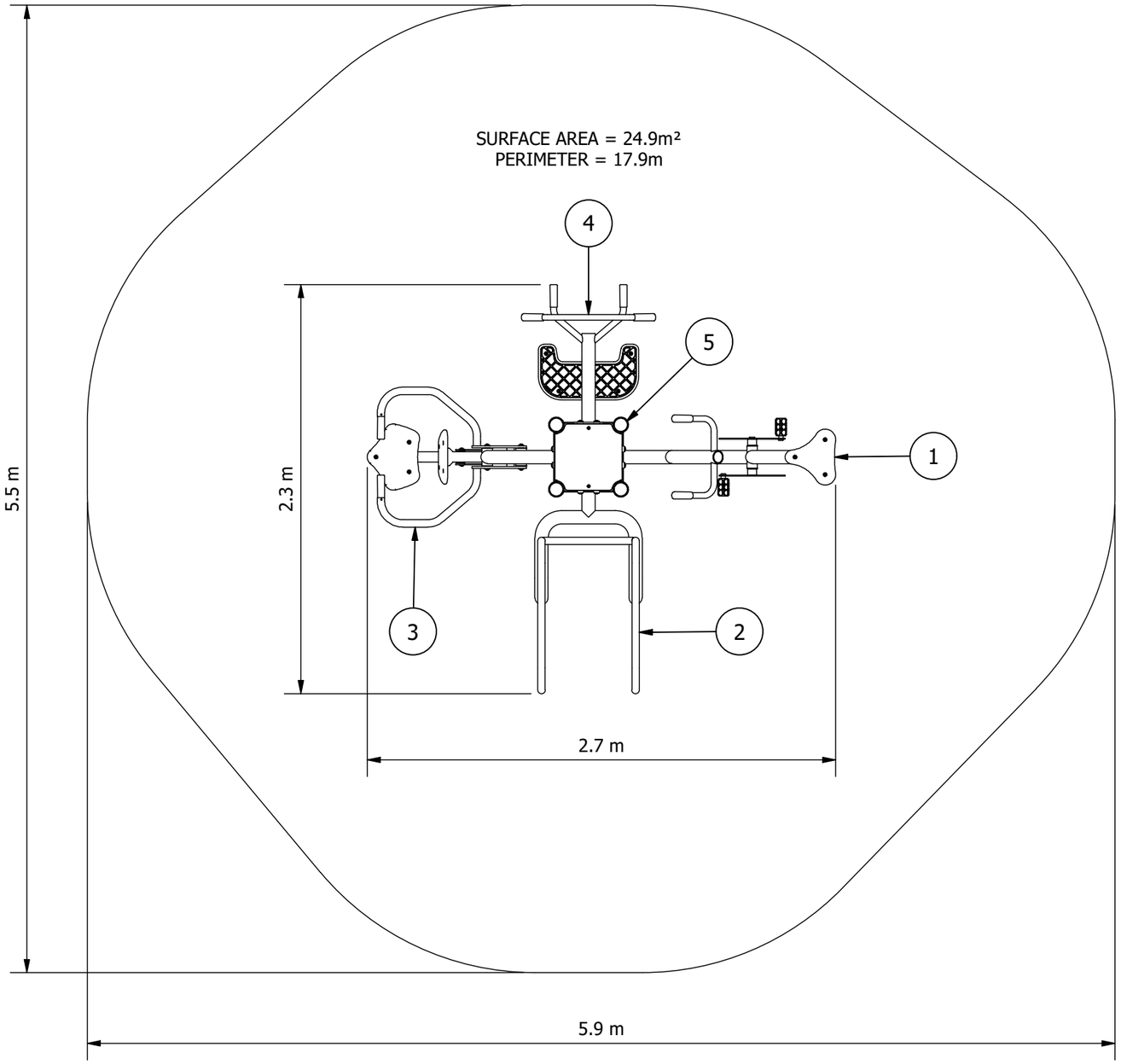

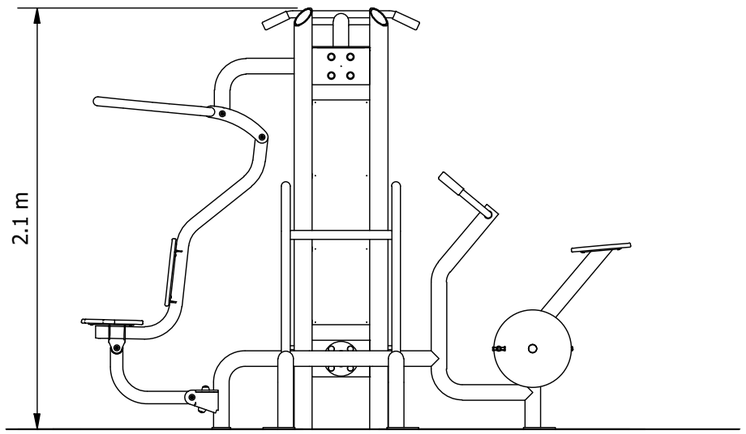

ELEVATION

RECOMMENDED MINIMUM SHADE CLEARANCES
- 2.5M FROM ANY ACCESSIBLE PART OF THE EQUIPMENT TO ANY CLIMBABLE PART OF THE SHADE STRUCTURE
- 1.5M FOR ALL OTHER SITUATIONS

Site Layout is indicative only & subject to change.
This design is confidential & subject to Copyright.

FITNESS DESIGN COMPLIANT
WITH AS 16630:2021.

Scale Bar 1:30@A3 (metres) 0 5

Design Plan

Design No: **DFP-AC-BP-PD-PU-B**

Drawn by: **S.J.**

Date drawn: **9/07/2021**