Fit-for-Parks
Elliptical Trainer Assembly

EQUIPMENT INVENTORY			
ITEM	**DESCRIPTION**	**QTY**	**FHF (mm)**
1	ELLIPTICAL TRAINER ASSEMBLY	1	400

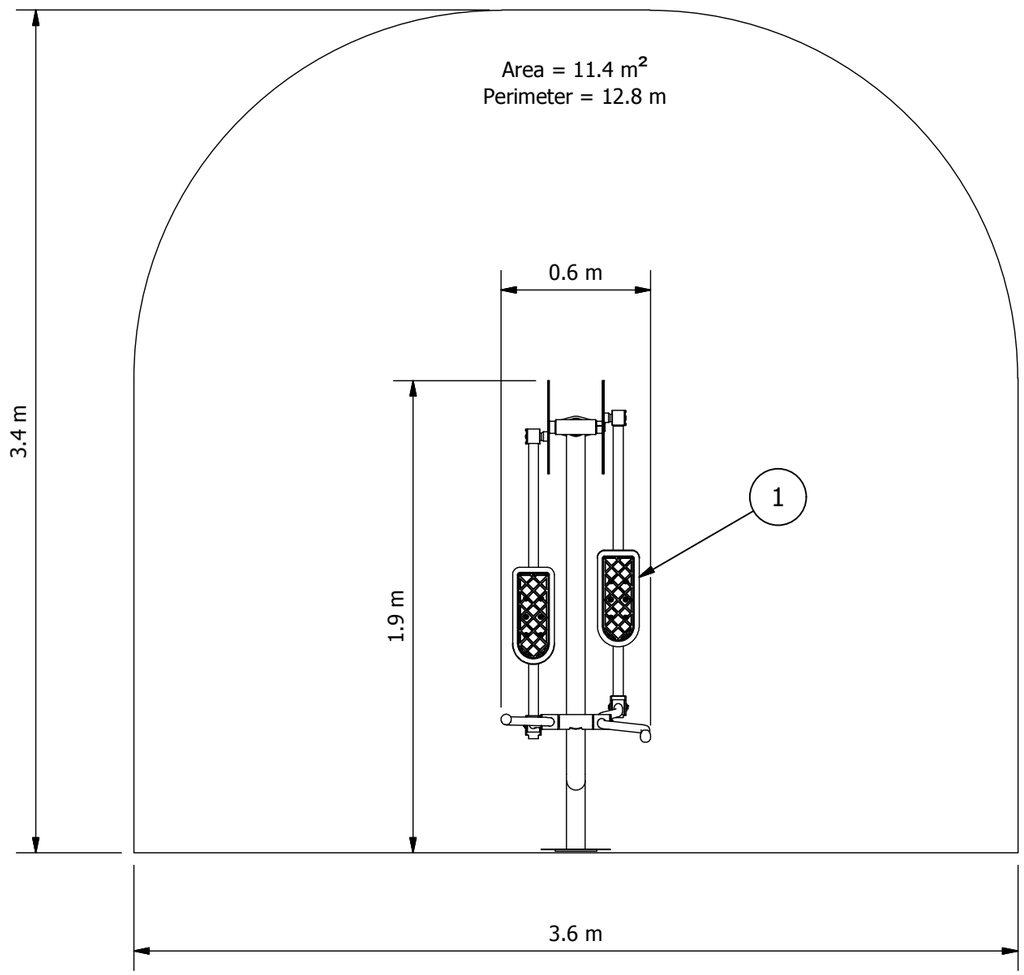

Site Layout is indicative only & subject to change.
This design is confidential & subject to Copyright.

Scale Bar (metres) 0 5

Design plan

Design No: **FFP6027-0**

Drawn by: **J.H.**

Date drawn: **27/01/2016**